Product Specifications

Thermo Scientific Mercury Probe / Converter, Model 83*i* GC

Low maintenance dilution probe converts mercury and scrubs sample gas

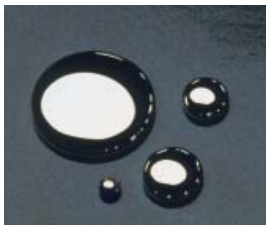

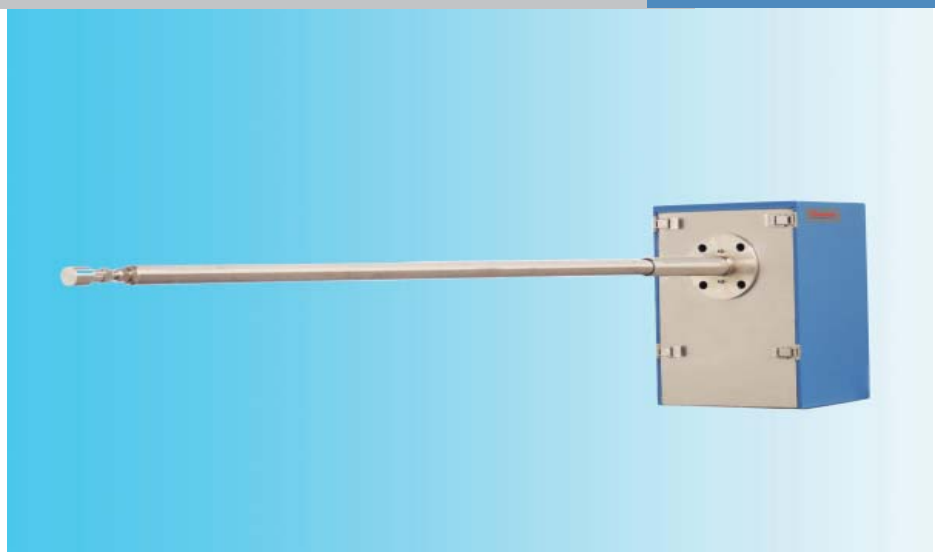

Key Features

- Dilution system for wet basis measurement
- Low flow non-inertial filter to reduce deposits from wet stacks
- Inert components to prevent reactions with mercury
- Conversion at the stack to prevent loss of elemental mercury
- Proprietary dry converter/scrubber requires no wet chemistry or water supply
- Integrated $HgCl_2$ generator

The Thermo Scientific Mercury Probe / Converter, Model 83*i* GC is one of the four major components of the Mercury Freedom System.

The Model 83*i* GC consists of a dilution probe and a proprietary dry converter/ scrubber housed in an insulated enclosure. The probe has been specifically designed for monitoring mercury emissions from coal-fired power plants and waste incinerators. Artifacts due to interactions with the fly ash are minimized using a sintered-metal filter to provide a particle-free, vapor-phase sample for analysis. Low-flow reduces deposits from wet stacks. Automated blow-back helps to ensure trouble-free continuous operation, and all components exposed to sample gas are glass-coated stainless steel, Teflon, Hastelloy or glass.

To prevent sample condensation, all key components (filter, eductor and dilution module) are enclosed in a heated aluminum module. The converter/scrubber converts oxidized forms of mercury to elemental mercury while removing interfering gases from the sample stream. Weighing only 90 pounds (including heated stinger), the probe has been designed for easier maintenance and service. The latched cover is easily removed from the probe allowing quick access to the interior. Inside, the components are so easily accessed that they can be serviced or removed in a matter of minutes.

Designed to meet the provisions of 40CFR Parts 60 and 75, the Mercury Freedom System provides a complete mercury monitoring solution that measures elemental, ionic, and total mercury in exhaust stacks from both coal-fired boilers and waste incinerators.

Product Specifications

To maintain optimal product performance, you need immediate access to experts worldwide, as well as priority status when your air quality equipment needs repair or replacement. We offer comprehensive, flexible support solutions for all phases of the product life cycle. Through predictable, fixed-cost pricing, our services help protect the return on investment and total cost of ownership of your Thermo Scientific air quality products.

Mercury Probe / Converter, Model 83*i* GC

Size and Weight	12" (L) x 12" (W) x 18" (H), 75 lbs. (including heated stinger)
Materials	Main enclosure: 304 stainless steel
	Glass coated filter: 316L stainless steel
	Dilution sampler: 316L stainless steel, glass coated
	All sample wetted parts are coated 316L stainless steel, Teflon, glass or Hastelloy
Installation	The probe mounts via a 2" ANSI flange to the assembly which has a 4" ANSI flange.
	This 4" flange is then mounted to the sample port. The sample inlet is a 1/2" tube
Power Requirements	All power supplied by the Model 82i Mercury Probe Controller
Thermocouple	Type K
Flow Rate (fast loop)	5-10 lpm
Flow Rate (sample)	250 sccm
Dilution Ratios	Nominal from 25:1 to 100:1

Assembly

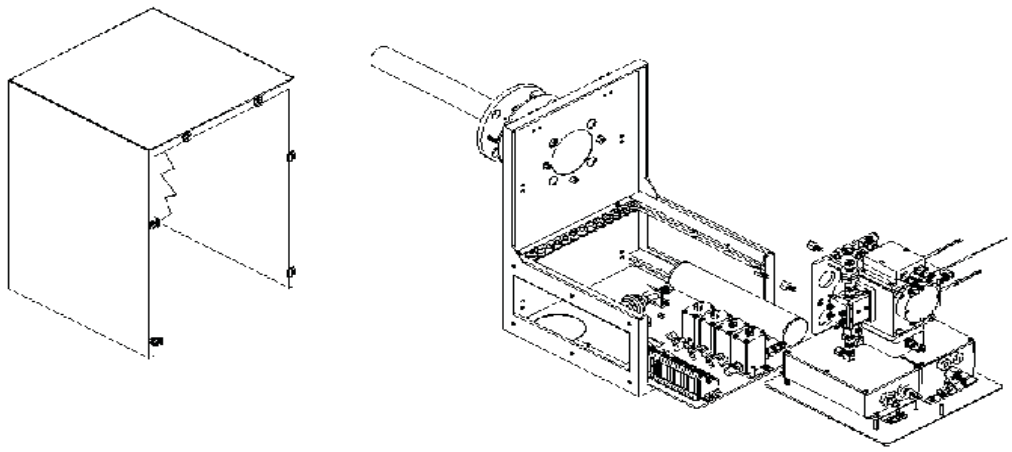

This specification sheet is for informational purposes only and is subject to change without notice. Thermo Fisher Scientific makes no warranties, expressed or implied, in this product summary.
© 2009 Thermo Fisher Scientific Inc. All rights reserved Thermo Fisher Scientific Inc.

This product is manufactured in a plant whose quality management system is ISO 9001 certified.

Lit_83iGCAQI_10/09

Air Quality Instruments
27 Forge Parkway
Franklin, MA 02038 USA
(866) 282-0430
(508) 520-0430
(508) 520-1460 fax
www.thermo.com/air

Thermo SCIENTIFIC